THB Mikrofon

technische Spezifikationen

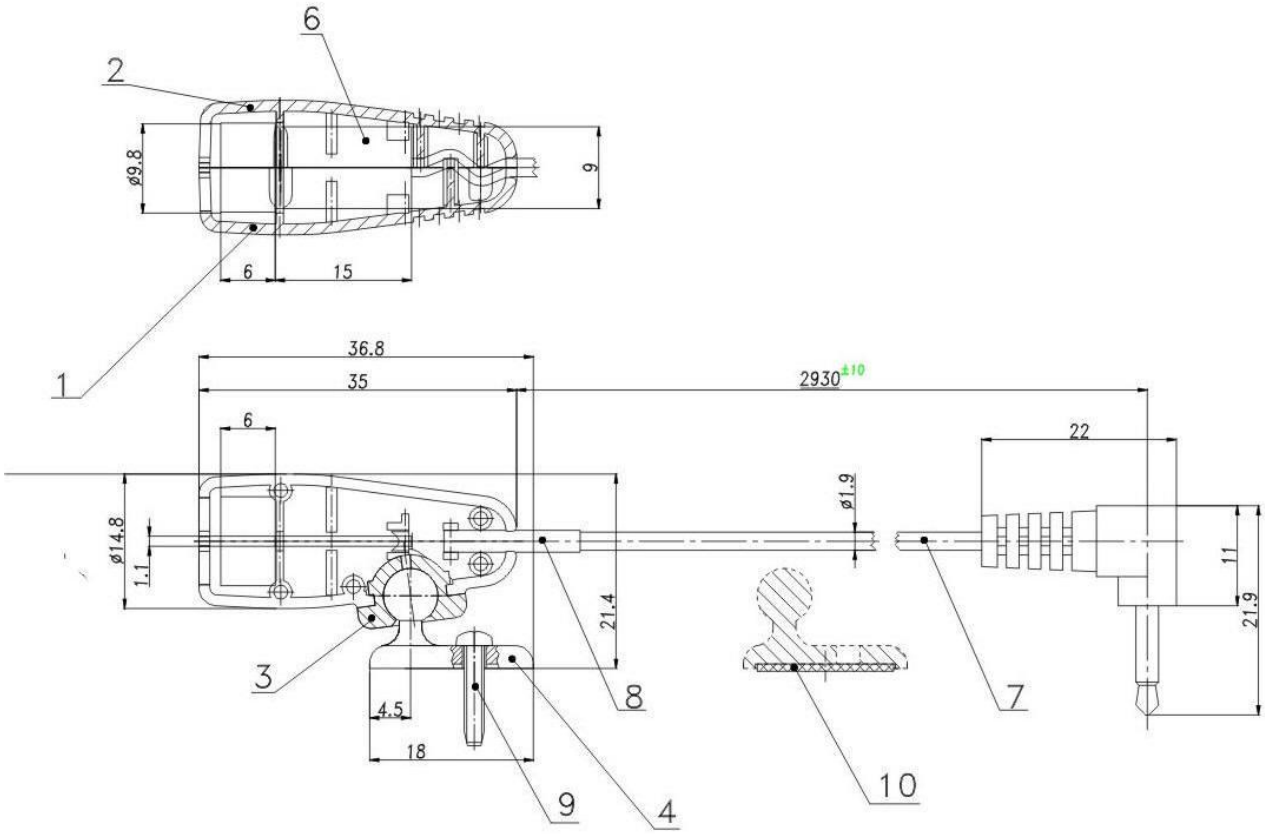

The THB Active Microphone is designed to be fixed on a convenient location inside the vehicle, no more than
30 cm from the user's mouth on the A-pillar, such as the sun visor. A 2-pin 2.5mm-jack plug is used for
connection.
Dimensions 36,8mm x 14,8 mm x 21,4 mm
Weight approx. 20 gr.
Case material ABS
Colour Black
Cable length 2930 mm (permanently attached to the microphone)
Connector 2,5 mm mono plug

Microphone Electret microphone
(WM 55A10),
Polar Pattern cardioid
Frequency Response 50 – 13000 Hz
Low Frequency Roll-off 400 Hz (-3 dB)
Sensitivity 630 mV/Pa
Output Impedance 600 Ohm (1 kHz)
Front to Rear Ratio at 1kHz 180° nom. 25dB
Amplification (integrated amplifier) 34 dB
Phantom Power Requirements 8V DC, over 680 Ω, max. 12V
Current Consumption 5 mA ± 5%